LightLine
Rico S.

MADE IN BRITAIN

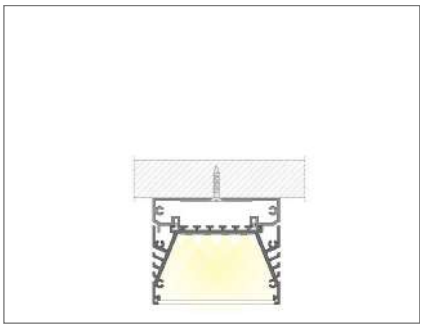

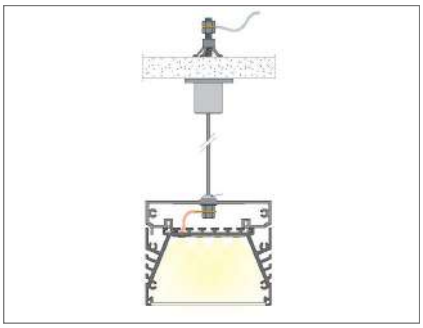

Features.

Extruded anodised aluminium in bespoke lengths
Dedicated for a max of 4 LED strips
not wider than 10.8 mm each
A line of light effect is achieved
when used with the opal cover
The internal shape is optimized to increase
the LED fixture cooling capability and proper
light distribution
Can be suspended from the ceiling as independent
lamp or attached directly to the ceiling
Power handling capability is high enough to
consider this lamp as main lighting LED fixture

Accessories.

Mounting profile
End caps
Mounting screws
Suspension rods, fasteners

Specification.

Input Voltage	12 VDC 24 VDC on request
LED	60, 120e, 120 / m
Power	4.8, 9.6, 14.4 W / m (per row)
Colour Temperature	2300 K, 2700 K, 3000 K, 4500 K, 6500 K
3, 4 channel	RGB, RGB-A, RGB-W
Covers	Transparent, Frosted
IP Rating	IP50, IP54, IP65
CRI	83, 93
Estimated LED Lifespan	50,000 Hrs
LED	Epistar
Beam Angle	120°
Operating Temperature	-20°C to +45°C

Light Output.

(lumen/metre run of LED internal)

	60 LED	120e LED	120 LED
3000K	310	640	1200
4500K	320	660	1320
6500K	380	780	1500

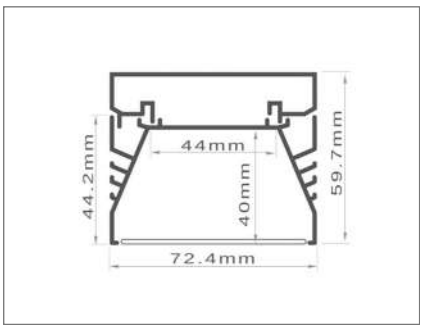

Product specification subject to change without prior notice.

CE RoHS COMPLIANT

MJ Lighting Technology Ltd www.mjlighting.com sales@mjlighting.com +44 1829 741 702